Fig. 29-L (Rev. 02/12)
(New 07/09)

COILS OF FLAT STEEL, 86 IN. O.D. OR LESS, COIL SHEET WIDTH NOT LESS THAN 50% OF O.D.—FLATCARS AND GONDOLAS, WITH LATERAL TROUGHS (SAWTOOTH) LINED WITH ANTI-SKID MATTING AND CUSHIONING DEVICES

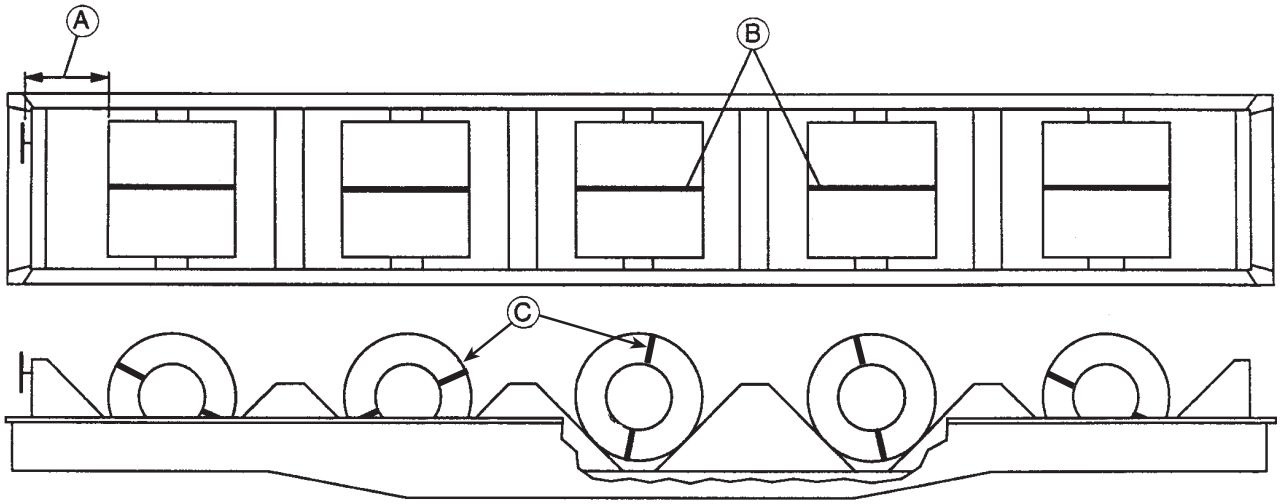

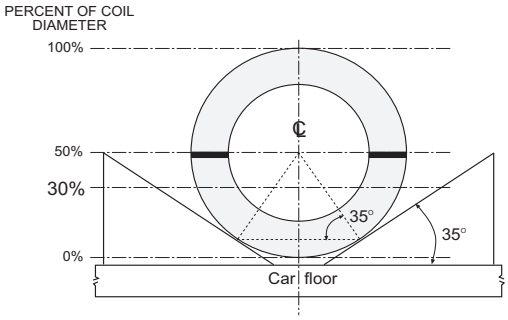

TROUGH ENGAGEMENT ON COIL DIAMETER
SKETCH 1

Item	No. of Pcs.	Description
A		Brake wheel clearance: see General Rule 2 in Section 1.
B	1 per coil.	Encircling band: 1 1/4 in. × .029 in. high tension steel band to encircle the outside circumference of the coil. Locate approximately in the center of the coil.
C	2 per coil—opposite sides.	Eye band: 1 1/4 in. × .029 in. high tension steel band to pass through the eye of the coil.

Notes and Additional Requirements:

1. Car must be specially designed with permanently attached troughs positioned to load coils with eye laterally on car.
2. Troughs must provide engagement with a minimum of 30% of the coil diameter. Refer to Sketch 1.
3. When loading a single coil or multiple coils of the same weight in a trough, the coil(s) must be laterally centered in the trough. When loading multiple coils of different weights in the same trough, the combined center of gravity of coils must be laterally centered (balanced) on the car.
4. Maximum temperature for hot rolled may not exceed that shown in Section 1, General Rules, Table 5.3.
5. Coils may not exceed 86 in. in diameter or design limitation of trough (see stencil on car) and must have a coil sheet width of not less than 50% of the coil outside diameter.
6. Troughs must be fully lined with approved anti-skid matting as permitted in General Rule 5.5.2 and Table 5.3 of Section 1.

Reference General Rules 1, 3, 5, 17, and 25 in Section No. 1 of the *Open Top Loading Rules Manual* for additional details.

Fig. 29-M (Rev. 06/14)
(New 06/13)

COILS OF FLAT STEEL, HOT ROLLED, SEMI-FINISHED, UNPROCESSED, 86 IN. O.D. OR LESS, COIL SHEET WIDTH NOT LESS THAN 50% OF O.D.—FLATCARS AND GONDOLAS, WITH 45° LATERAL TROUGHS (SAWTOOTH) LINED WITH ANTI-SKID MATTING AND CUSHIONING DEVICES

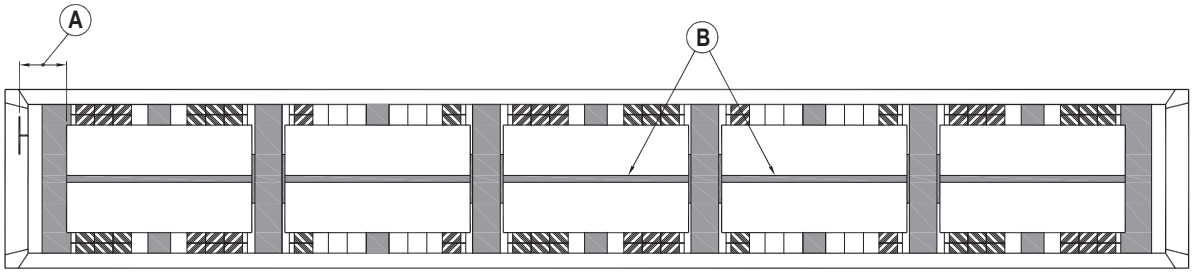

TOP VIEW

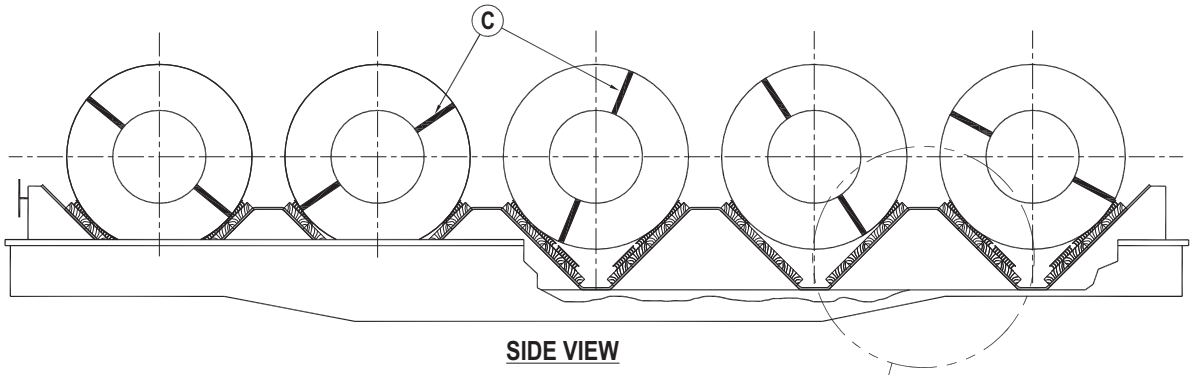

SIDE VIEW

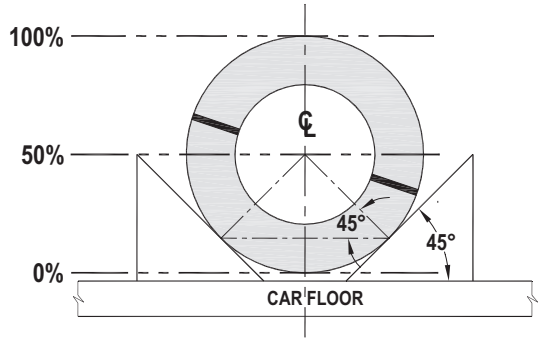

TROUGH ENGAGEMENT ON COIL DIAMETER

SKETCH 1

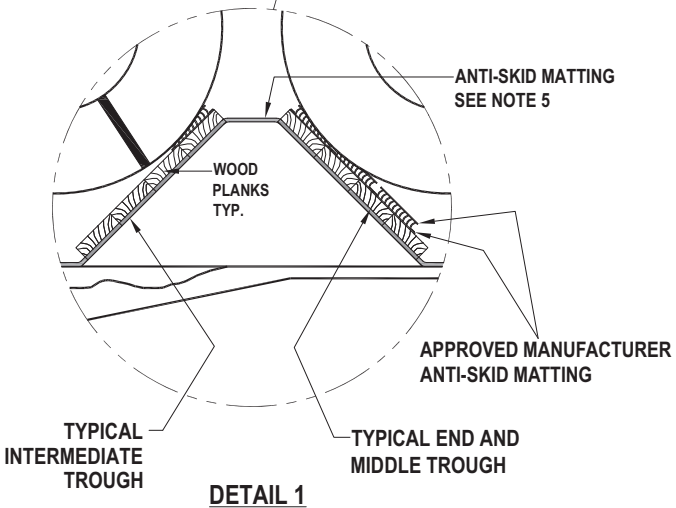

DETAIL 1

IMPLEMENTED 06/2014

Fig. 29-M (Rev. 06/14) (Concluded)
(New 05/13)

COILS OF FLAT STEEL, HOT ROLLED, SEMI-FINISHED, UNPROCESSED, 86 IN. O.D. OR LESS, COIL SHEET WIDTH NOT LESS THAN 50% OF O.D.—FLATCARS AND GONDOLAS, WITH 45° LATERAL TROUGHS (SAWTOOTH) LINED WITH ANTI-SKID MATTING AND CUSHIONING DEVICES

Item	No. of Pcs.	Description
A		Brake wheel clearance: see General Rule 2 in Section 1.
B	1 per coil.	Encircling band: 1 1/4 in. × .029 in. high tension steel band to encircle the outside circumference of the coil. Locate approximately in the center of the coil.
C	2 per coil	Eye bands: 1 1/4 in. × .029 in. high tension steel bands to pass through the eye of the coil on opposite sides.

Notes and Additional Requirements:

1. Car must be specially designed with permanently attached 45° troughs positioned to load coils with eye laterally on car.
2. When loading a single coil or multiple coils of the same weight in a trough, the coil(s) must be laterally centered in the trough. When loading multiple coils of different weights in the same trough, the combined center of gravity of coils must be laterally centered (balanced) on the car.
3. Only hot rolled, semi-finished, unprocessed steel coils may be loaded to this figure.
4. Coils may not exceed 86 in. in diameter or design limitation of trough (see stencil on car) and must have a coil sheet width of not less than 50% of the coil outside diameter.
5. Troughs must be fully lined with approved anti-skid matting as permitted in General Rule 5.5.2 and Table 5.3 of Section 1.
6. When the total lateral vacant space across a trough exceeds 4 in., load must be secured to prevent moving or tipping.

Reference General Rules 1, 3, 5, 17, and 25 in Section No. 1 of the *Open Top Loading Rules Manual* for additional details.

IMPLEMENTED 06/2014

Fig. 30 (Rev. 04/07)
(New 02/60)

(Archived 02/2013)

COILS OF FLAT STEEL, 55 IN. O.D. AND OVER, ON SKIDS—GONDOLAS