Fig. 160 (Rev. 08/12) (Concluded)
(New 02/11)

PIPE, STEEL, BARE, 12 3/4 IN., 16 IN., OR 24 IN. OD, 50 FT OR LONGER—CENTER A-FRAME RISERLESS FLATCARS, WITH CUSHIONING DEVICES

Item	No. of Pcs.	Description
A		Vacant
B	Minimum 5 per each side of car A-frame.	Bearing pieces: hardwood, 4 in. × 4 in. Length must extend the full width of car on each side of center A-frame posts as shown, and sufficient to apply Item G chock blocks on the top of both ends of each bearing piece. Locate Item B evenly spaced longitudinally over the car deck, each side of A-frame.
C	Minimum 5 per each layer.	Separators: hardwood, use either 2 in. × 4 in. or 4 in. × 4 in. Length must extend the full width of each pipe layer on each side of the center A-frame, and sufficient to apply Item G chock blocks on the top and bottom of both ends of each separator. Locate separators in line with Items B where practicable.
D	2 per each Item B; 4 per each Item C.	Chock block: hardwood, 4 1/2 in. × 4 1/2 in. × 4 in. wide per Item D detail. Locate to contact pipe and nail to Items B and C with five or six 16-D nails.
E	4 each layer.	Unitizing bands: high tension, 1 1/4 in. × 0.031 in. Locate around the two outside pipes in each layer, both sides of A-frame, at an equal distance from the vertical center posts to reduce contact with those posts.
F	4 each layer.	Unitizing bands: high tension, 1 1/4 in. × 0.031 in. Locate around all pipes in each layer, both sides of A-frame, adjacent to Items E and at an equal distance from the vertical center posts to reduce contact with those posts.
G	4 every two layers.	Unitizing bands: high tension, 1 1/4 in. × 0.031 in. Locate around all pipes in each layer and to the layer directly above, both sides of A-frame, and at an equal distance from the vertical center posts to reduce contact with those posts.
H	14 per each side of A-frame car.	Cables: 3/8 in. diameter, 8,800-lb minimum breaking strength. Winch assemblies must be equipped with a device to maintain tension. Prior to tightening, there must be a minimum of 2 1/2 wraps of cable around the winch drum. Use as many cables as possible, with a minimum of at least 14, and must be free of kinks and tangles. Tension to be applied with the use of an 18 in. bar or 3/4 in. ratchet. Cables are to be secured to A-frame in slot nearest to top of load. Tie-down cable corner protectors are not to be used but positioned above the load.

Notes and Additional Requirements:

1. This figure is designed and intended for pipe lengths of 50 ft or longer.
2. Load pipe in accordance with OTLRM Section 1, Fig. 3.5, “Load Distribution on Typical Center Beam Flatcar, “and all parts under Rule 3.5 therein. Pipe must be centrally located on each side of car A-frame, with weight on either side as close to equal as possible. During loading and unloading operations, *keep the load balanced* from side to side to prevent car tipping.
3. Shippers must be made aware that scratches to the pipe surfaces can be expected from contact with the cables, unitizing bands, and/or center posts.
4. Secure and/or stow any unused cables.
5. If the load exceeds the width of the car at any point, it may become a dimensional load on some railroads. Contact the carrying roads before shipping.

Reference General Rules 1 of the *Open Top Loading Rules Manual* for additional details.

Fig. 230 (New 10/14)

PIPE, STEEL, BARE OR COATED, 67 IN. TO 156 IN. O.D., 10 FT TO 80 FT LONG—FLATCARS

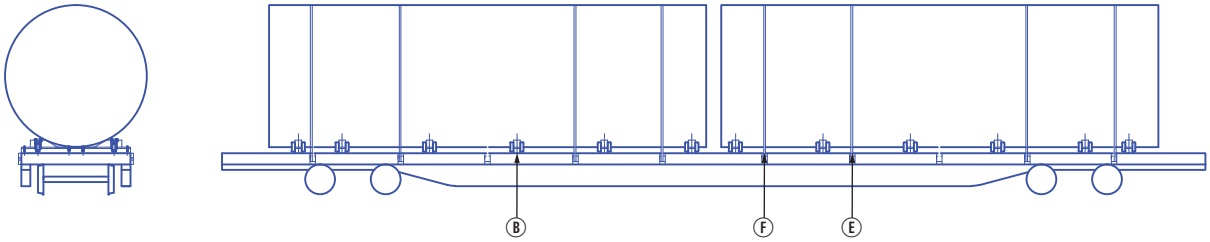

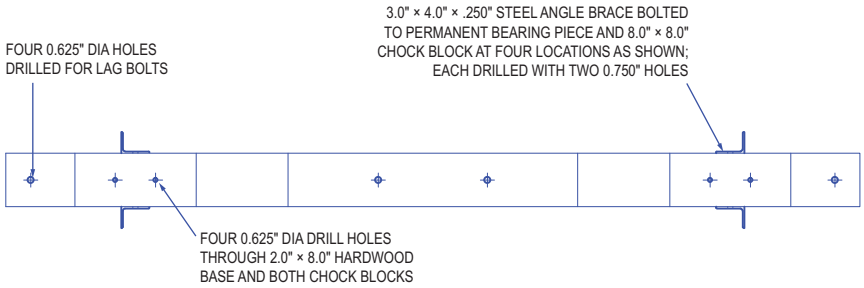

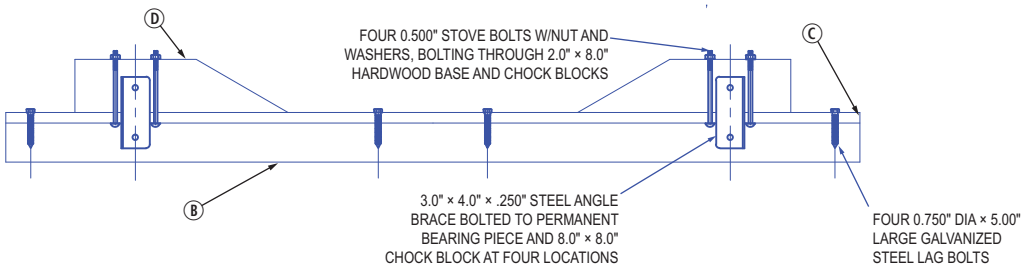

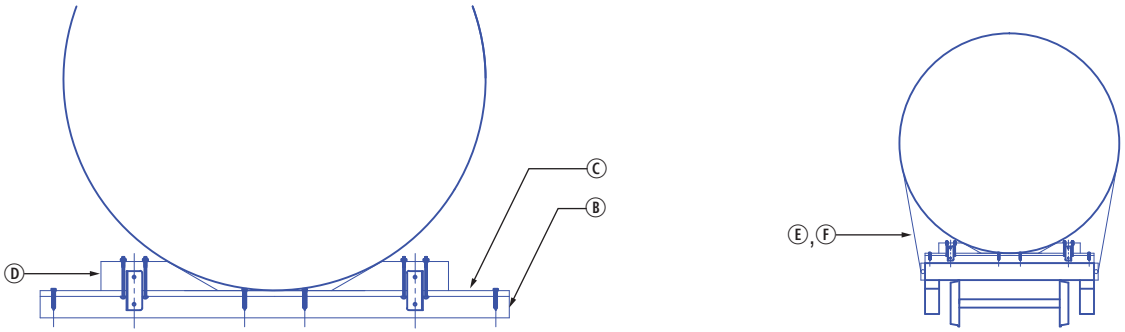

SKETCH 1

Item	No. of Pcs.	Description
A		Brake wheel clearance: see General Rule 2 in Section 1.
B	2 per pipe 10 to 40 ft long. Add 1 for each 20 ft or less.	Bearing pieces: 8 in. × 10 in. minimum, hardwood, length about equal to width of car. Must be secured to car (see Sketch 1).
C	1 per Item B.	Bearing piece top plate: 2 in. × 8 in. hardwood, length equal to Item B. Secure to Item B with four ¾ in. × 5 in. lag screws.
D	2 each per Item C.	Wood chock blocks: 8 in. × 8 in. × 30 in., cut to fit contour of pipe or wedge-shaped (30°). Locate to contact pipe. Secure to Item B with two bolts, ½ in. × approximately 10 in. long with flat washers and nuts and two angle braces 3 in. × 4 in. × .25 in., per Item D secured with two ½ in. × 4 in. lag screws.

IMPLEMENTED 11/2014

Fig. 230 (New 10/14) (Concluded)

PIPE, STEEL, BARE OR COATED, 67 IN. TO 156 IN. O.D., 10 FT TO 80 FT LONG—FLATCARS

Item	No. of Pcs.	Description
E	2 per pipe 10 to 30 ft long. Add 1 for each additional 10 ft or less (maximum 6)	Tie-down assemblies: consisting of a ratchet and polyester woven straps 4 in. wide with 24,000-lb MBS. Locate near bearing pieces where practical, and anchor to opposite side of car. Winch taut using a minimum 30-in. bar.
F	2 per pipe 10 to 30 ft long. Add 1 for each additional 10 ft or less (maximum 6)	Tie down strap: approved non-metallic, woven or bonded, Type 1A, Grade 7.

Notes and Additional Requirements:

1. Coated pipe must have a minimum of 4 feet of void space between end of load and end of car, except on cars equipped with bulkheads.
2. Bearing pieces may be extended beyond width of car deck to accommodate the application of Item D chock blocks.
3. When pipe is coated, adequate padding or protection must be used to prevent chafing at bearing points.
4. For load distribution on 85 ft and 89 ft flatcars, reference Section 1 General Rule 3.

Reference General Rules 1 of the *Open Top Loading Rules Manual* for additional details.

IMPLEMENTED 11/2014

THIS PAGE LEFT BLANK INTENTIONALLY