Fig. 128 (Rev. 06/14)
(New 09/92)

PIPE, STEEL, UNCOATED, 5 IN. TO 20 IN. O.D., 25 FT TO 48 FT LONG—BULKHEAD FLATCARS, WITH CUSHIONING DEVICES

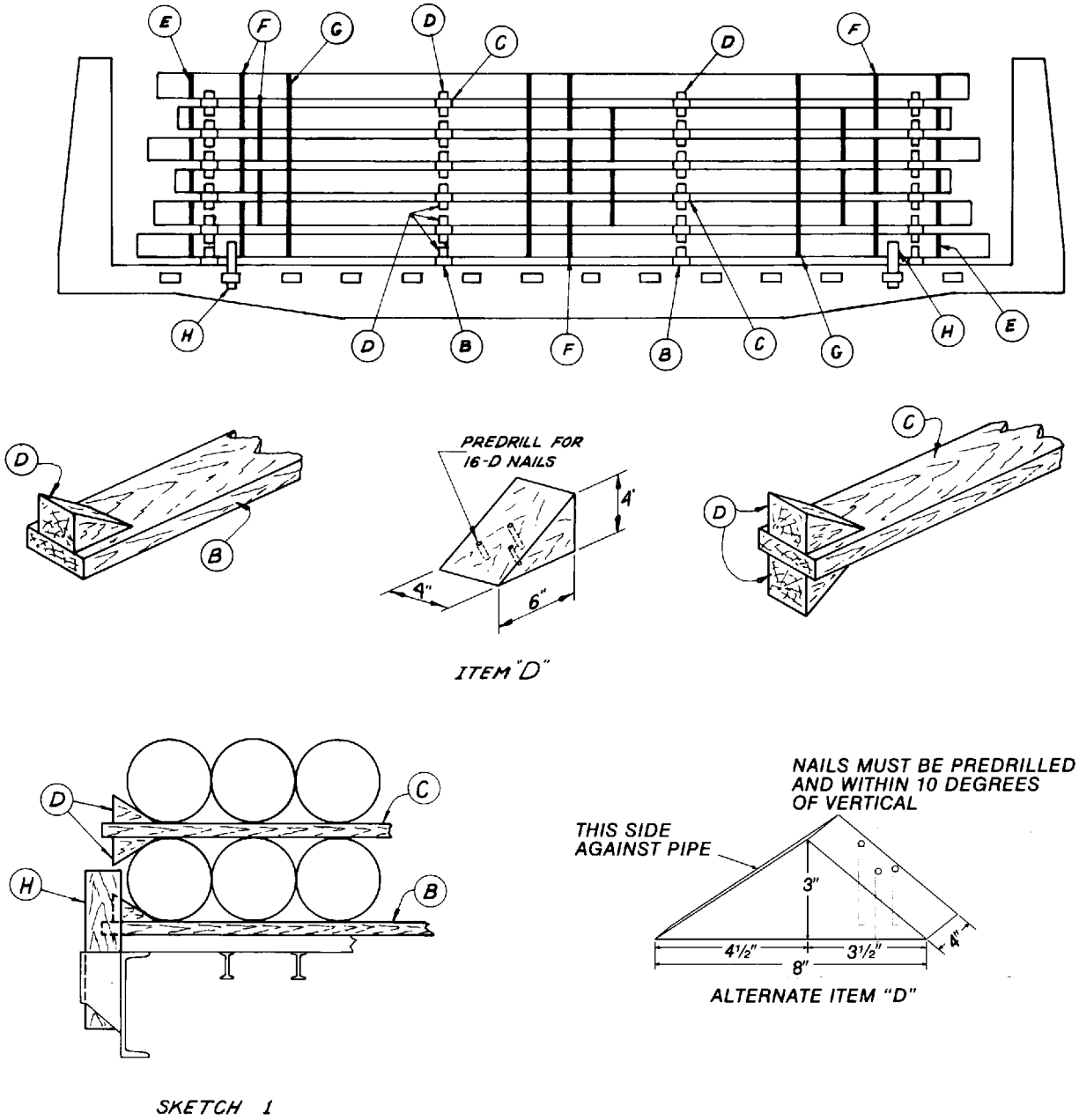

Item	No. of Pcs.	Description
A		Vacant.
B	4	Bearing pieces: hardwood, 2 in. × 6 in., length equal to width of car but not to extend beyond outside face of stake pockets. Bearing pieces must be predrilled. Locate evenly spaced under load and secure each to car floor with five 16-D nails, equally spaced.
C	4	Separators: hardwood, 2 in. × 6 in., length equal to width of load, but not to extend beyond width of car. Locate between each layer and in line with Items B, when possible. For pipe 8 in. in diameter or less, all separators must be staggered with a vertical offset sufficiently to avoid chock contact (this not shown on drawing).

IMPLEMENTED 06/2014

Fig. 128 (Rev. 06/14) (Concluded)
(New 09/92)

PIPE, STEEL, UNCOATED, 5 IN. TO 20 IN. O.D., 25 FT TO 48 FT LONG—BULKHEAD FLATCARS, WITH CUSHIONING DEVICES

Item	No. of Pcs.	Description
D	2 per each Item B. 4 per each Item C.	Chock blocks: hardwood, 4 in. × 4 in. × 6 in., predrilled. Locate at each end of Items B, against pipe and secure each with three 20-D common nails. On Item C, locate one top and bottom on each side of load against pipe and secure each with three 20-D common nails. For pipe 8 in. in diameter or less, chocks on the Item B bearing pieces and the bottom of the Item C separators between the first and second layer must be of hardwood, 2 in. × 6 in. × 6 in., predrilled and secured with three 16-D common nails.
E	2 per each layer.	Layer encircling bands: 2 in. × .044 in. high tension. Locate one at each end of each layer encircling layer. Apply as each layer is placed on car. Locate as far from bearing pieces, separators, and other bands as possible.
F	3 per each layer.	Interlacing bands: 2 in. × .044 in. high tension. Locate under bottom of bottom layer encircling pipe in the layer above. Locate through separation above bottom layer encircling pipe in the second and third layers, making same application at succeeding layer separations. Locate as far as possible from bearing pieces, separators, and other bands.
G	4	Encircling bands: 2 in. × .044 in. high tension. Place under bottom layer, encircling entire load evenly spaced, as far as possible from bearing pieces, separators, and other bands. Locate end bands approximately 3 ft from each end of the load with the others equally spaced between.
H	As required.	Stub stakes: hardwood, 4 in. × 5 in., height equal to center of pipe on bottom layer of load, but not to interfere with chock blocks located on bottom of separators. Locate one at each corner of load, outside or inside of end bearing pieces as illustrated in Sketch 1, and secure to stake pockets to prevent displacement. Load must be protected by a minimum of two pairs of stakes at all times.

Alternate Item D

Alt D	2 per each Item B. 4 per each Item C.	Chock block: hardwood, 3 in. × 4 in. × 8 in., predrilled. Locate at each end of Item B against pipe and secure each with three 16-D nails. On Items C, locate one on top and one on bottom on each side of load against pipe. Secure each with three 16-D nails.

Notes and Additional Requirements:

1. Load must be centrally located on car at origin.
2. Height of load must not exceed 11 ft above car floor.

Reference the General Rules in Section No. 1 of the *Open Top Loading Rules Manual* for additional details.

IMPLEMENTED 06/2014