Fig. 13-B (New 10/81)

(Archived 02/2013)

PLATE, DIAGONAL, SINGLE OR LAPPED PILES—GONDOLAS

Fig. 14 (Rev. 06/14)
(New 02/60)

PLATE OR SLAB, HORIZONTAL—FLATCARS OR BULKHEAD FLATCARS, 66 FT OR LESS

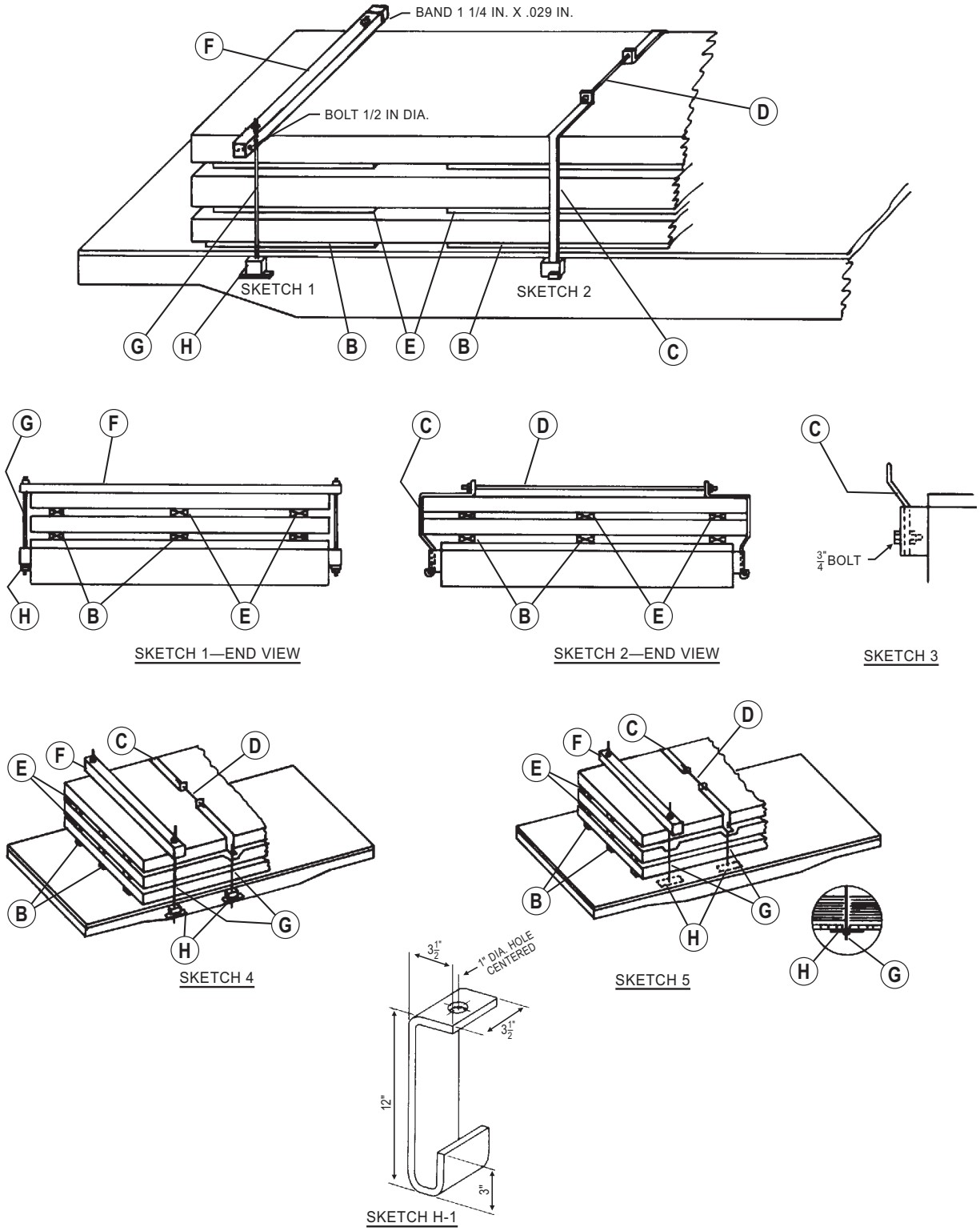

IMPLEMENTED 06/2014

Fig. 14 (Rev. 06/14) (Continued)
(New 02/60)

PLATE OR SLAB, HORIZONTAL—FLATCARS OR BULKHEAD FLATCARS, 66 FT OR LESS

Item	No. of Pcs.	Description
A		Load should be centrally located on car at origin, but must not be closer than 2 ft from the B end and 1 ft from the A end of car. Conventional flatcars only. When the load is prepared on flatcars with side-mounted hand brakes, the load may be located no closer than 1 ft from either end of the car or from any hand brakes and safety appliances that extend above the side sill.
B	1 per each 7 ft of length or less.	Crosswise bearing pieces: hardwood, minimum, 1 in. × 3 in., height not to exceed width, in one piece, length about equal to width of car. Locate end pieces approximately 3 ft in from ends of pile(s) and in line with stake pockets when possible. For cars equipped with permanent steel bearing pieces, height must prevent load from resting on steel. Width of bearing pieces may not be less than height. (Use optional on cars not equipped with steel floor and/or permanent steel bearing pieces.)
	Minimum of 2.	Lengthwise bearing pieces: hardwood, minimum 1 in. × 3 in. × 8 ft, height not to exceed width. May consist of more than one piece. Space ends no more than 3 ft apart. Locate not less than 6 in. nor more than 12 in. from edge of bottom plate and within 3 ft from each end of pile(s). (Use Optional)
C	See chart.	Clamping pieces: consisting of two pieces of steel, 1/2 in. × 3 1/2 in., or optionally A572 Grade 50 steel, 7/16 in. × 3 1/2 in.; length to suit per Sketch 2. Locate about one-quarter length, but not more than 7 ft from ends of pile(s), with intermediate Items C equally spaced between. Form and secure to stake pockets as shown in Sketch 2, or secure to stake pocket using a 3/4-in. bolt, washer and nut as shown in Sketch 3. Clamping pieces may also be formed as illustrated in Sketches 4 and 5 when used with Item G tie-rods.

Chart—Items C and F

No. of Pcs.	Height of Pile Above Bearing Pcs.	Length of Pile
2	24 in. or less	12 ft or less.
3	24 in. or less.	Over 12 ft to length of car.
3	Over 24 in.	Over 12 ft to 30 ft.
4	Over 24 in.	Over 30 ft to length of car.
When 50% of pile height consists of plates 90 in. wide or less, one additional Item C must be applied.		

D	1 per each pair of Items C.	Tie rod: 3/4-in.-diameter steel rod or bolt, length to suit, passed through Items C. Sketch Nos. 2, 4, and 5. Use of “all thread" rod is permissible as per Section 1, General Rule 16.
E	1 per each 7 ft of length or less.	Crosswise separators: lumber, minimum, 1 in. × 2 in., height not to exceed width, in one piece, length about equal to but not exceeding width of pile. Locate in line with crosswise Items B when possible (use optional).
	Minimum of 2.	Lengthwise separators: lumber, minimum, 1 in. × 2 in. × 8 ft, height not to exceed width. May consist of more than one piece. Space ends no more than 3 ft apart. Locate not less than 6 in. or more than 12 in. from edge of bottom plate in lift and within 3 ft from each end of bottom plate in lift (use optional).
F	See chart.	Clamping pieces: hardwood, 4 in. × 6 in., length equal to width over stake pockets. Use one 1/2-in.-diameter bolt crosswise, with washers on each end or one 1 1/4 in. × .029 in. high tension band to prevent splitting. Bolts or bands must be applied outside of Items G. Locate about one-quarter length, but not more than 7 ft from ends of pile(s), with intermediate Items F equally spaced between. Not required for loads prepared in accordance with Sketch 2.
G	2 each Items F or C, Sketch Nos. 1, 4 and 5.	Tie rod: 3/4-in.-diameter steel rod or bolt, length to suit, with washers at top. Pass through Item F, stake pocket or floor and Item H. Rods must be located within 4 in. of side of pile as illustrated in Sketches 1, 4, and 5. Not required for loads prepared in accordance with Sketch 2. When preparing loads under Sketch 5, Items C may be extended to car floor and Items G substituted with a 3/4-in. bolt passed through the car floor and Items H.
H	1 each Item G Sketch Nos. 1, 4 and 5.	Steel plates: 1/2 in. × 4 in. × 10 in. applied under stake pocket or 1/2 in. × 4 in. × 6 in. steel plate when Item G is located under floor on cars equipped with steel plate floors. For cars equipped with other than steel plate floors, use a 1/2 in. × 4 in. × 18 in. steel plate. Not required for loads prepared in accordance with Sketch 2. J-hooks, as illustrated in Sketch H-1, may be substituted for Item H when applied to stake pocket.

IMPLEMENTED 06/2014

Fig. 14 (Rev. 06/14) (Concluded)
(New 02/60)

PLATE OR SLAB, HORIZONTAL—FLATCARS OR BULKHEAD FLATCARS, 66 FT OR LESS

Item	No. of Pcs.	Description
Alternate Item C		
Alt C	Minimum 2 per pile.	Chain assembly: 1/2-in. alloy with minimum WLL of 11,250 lb per pile (MBS of 45,000 lb), equipped with ratchet-type load binder and corner protectors. Locate corner protectors on top of corners of pile and pass chain directly across pile, attaching to chain from opposite side. Load must be located on car as to utilize the greatest number of chains possible. Chains to be located a minimum of 2 ft from end of pile. Minimum two chains per 20-ft pile length with an additional chain for every additional 10 ft in pile length. Chains to be secured to the car through stake pockets.

Notes and Additional Requirements:

1. If piles are overlapped lengthwise, each plate(s) must have minimum number of Items C or F applied to each pile.
2. Additional blocking may be applied between plates to provide stability.
3. When necessary to elevate load for clearance purposes, a minimum of two crosswise and lengthwise bearing pieces per pile may be stacked in alternating layers. Crosswise pieces must be located approximately 18 in. from ends of longitudinal pieces. Load may also be raised in accordance with General Rule 11.2, Section 1.
4. Height of load including separators is not to exceed 42 in. above top of bearing pieces.
5. Do not weld, cut/burn holes, or modify car body without car owner's permission.

Reference the General Rules in Section No. 1 of the *Open Top Loading Rules Manual* for additional details.

IMPLEMENTED 06/2014

IMPLEMENTED 06/2014

THIS PAGE LEFT BLANK INTENTIONALLY

Fig. 14-A (Rev. 06/14)
(New 02/97)

PLATE, HORIZONTAL, SINGLE LOAD, WITH OR WITHOUT OVERHANG—FLATCARS

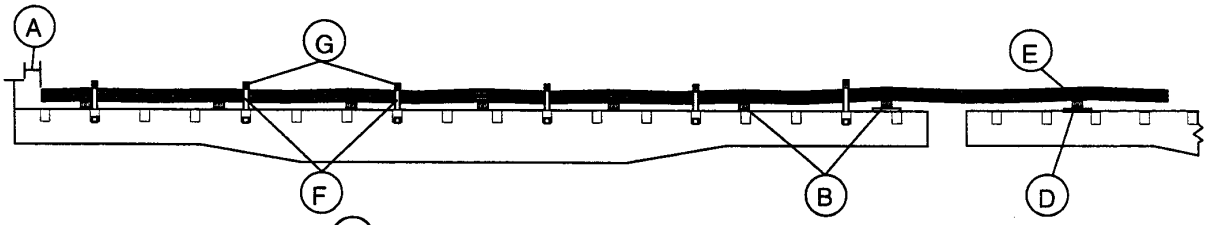

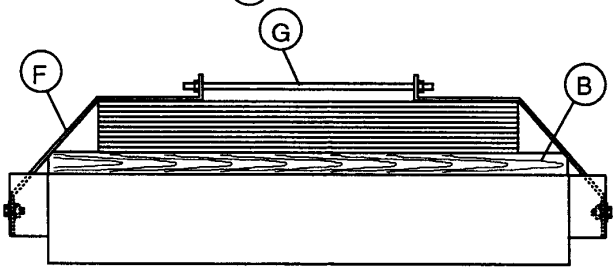

End View

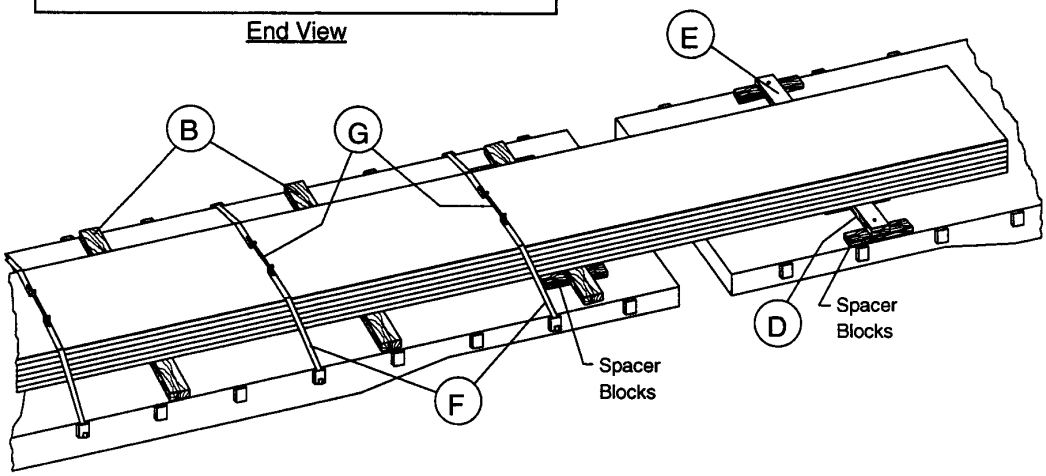

Sketch No. 1

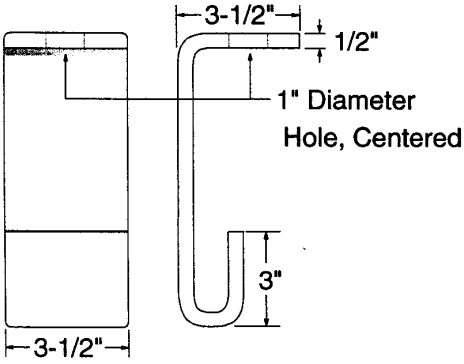

Sketch No. 2 – Item "F"

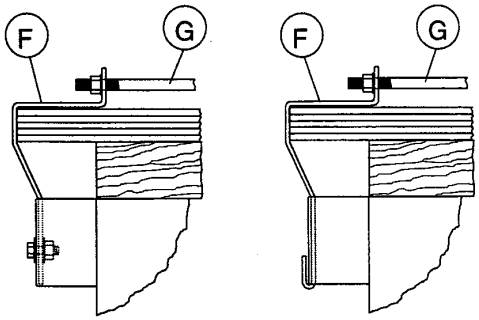

Sketch No. 3

IMPLEMENTED 06/2014

Fig. 14-A (Rev. 06/14) (Concluded)
(New 02/97)

PLATE, HORIZONTAL, SINGLE LOAD, WITH OR WITHOUT OVERHANG—FLATCARS

Item	No. of Pcs.	Description
A		Load should be centrally located on car at origin, but must not be closer than 2 ft from the B end and 1 ft. from the A end of car. Conventional flatcars only. When the load is prepared on flatcars with side-mounted hand brakes, the load may be located no closer than 1 ft from either end of the car or from any hand brakes and safety appliances that extend above the side sill.
B	As required.	Bearing pieces: hardwood, minimum 2 in. × 6 in., in one piece and preferably rough. If dimension of Item B is increased, width must be at least 2 in. greater than height. Height of end bearing pieces sufficient to maintain a minimum of 4 in. clearance above idler car. The length must be about equal to width of car. Locate end pieces approximately 3 ft from end of load with additional bearing pieces placed at approximately 10 ft intervals. If needed to increase height of end bearing piece to obtain required clearance, hardwood spacer blocks may be located underneath and perpendicular to bearing piece as shown in Sketch No. 1. Spacer blocks to be a minimum of 6 in. × 12 in. with height to suit. Place under the outside edges of load and space additional pieces every 12 in. between. Secure each to car floor with four common nails with a length at least 2 in. greater than thickness of spacer block, or two 3/4-in. bolts with washers and nuts. Secure bearing piece to each outside spacer block using three common nails with a length at least 2 in. greater than thickness of bearing piece, or one 3/4-in. bolt passing through each end spacer block and securing to car floor.
C	As required.	Separators: lumber, minimum 1 in. × 2 in., height not to exceed width, in one piece. Length about equal to but not exceeding the width of the load. Locate in line with Items B when possible. (Use optional and not shown on drawings.) When used, apply one 2 in. × .044 in. high tension band near each separator on the overhanging portion of the load to prevent displacement of the separator.
D	As required.	Sliding piece: hardwood, minimum of 6 in. wide, length equal to width of idler car. Height must be sufficient to maintain a minimum of 4 in. clearance above idler car. Locate minimum of one sliding piece on idler car with additional pieces to maintain required clearance. (Not required when material is rigid enough to maintain clearance specified.) Secure to car floor or through stake pockets with two 3/4-in.-diameter countersunk head bolts with nuts. When Item E is applied, only one set of bolts need be applied to secure both items. When sliding piece is located between end of car and body bolster, the weight on same must not exceed 15% of car's load limit. If needed to increase height of sliding piece to obtain required clearance, hardwood spacer blocks may be located underneath and perpendicular to the sliding piece. Spacer blocks to be a minimum of 6 in. × 12 in. with height to suit. Place under the outside ends of sliding piece and space additional pieces every 12 in. between. Secure each to car floor with four common nails with a length at least 2 in. greater than height of spacer block, or two 3/4-in. bolts with washers and nuts. End of lading must extend a minimum of 40 in. over Item "D."
E	1 per each Item D.	Steel plate: 1/4 in. × 6 in., length equal to length of Item D. Secure to top of Item D by bolting through Item D and stake pockets with two 3/4-in.-diameter countersunk head bolts with nuts. Use optional when bottom load width on overhanging portion is 30 in. or greater.
F	5 pair for cars 60 ft long and under. 6 pair for flatcars over 60 ft long.	Clamping pieces: steel, 1/2 in. × 3 1/2 in., length to suit. Locate square to load and position end pieces approximately 6 to 10 ft from ends of load on carrying car. Locate intermediate pieces at equal intervals between. May be secured to stake pocket using hook method or bolted to stake pocket as shown in Sketch No. 3. Refer to Sketch No. 2 for details.
G	1 per each pair of Items F.	Tie rods: steel rod or bolt, 3/4-in.-diameter, length to suit. Pass through Items F on top of load and secure with washer and nut on each end. Use of "all thread" rod is permissible as per Section 1, General Rule 16.

Notes and Additional Requirements:

1. Height of load including separators must not exceed 42 in. above top of bearing pieces.
2. All bolts used during securement are to have the threads chisel checked or otherwise sufficiently distorted to prevent bolts and/or nuts from working loose.
3. Do not weld, cut/burn holes, or modify car body without car owner's permission.

Reference the General Rules in Section No. 1 of the *Open Top Loading Rules Manual* for additional details.

IMPLEMENTED 06/2014

Fig. 14-C (Rev. 06/13)
(New 09/92)

PLATE, HORIZONTAL, EXCEEDING WIDTH OF CAR, 35 FT LONG AND OVER, OF UNIFORM LENGTH, WIDTH, AND THICKNESS—BULKHEAD FLATCARS, 50 FT TO 52 FT 6 IN. LONG

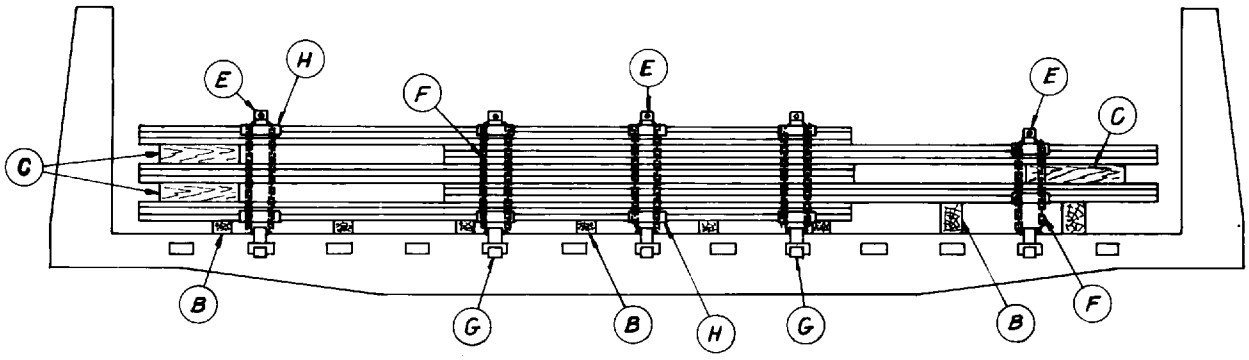

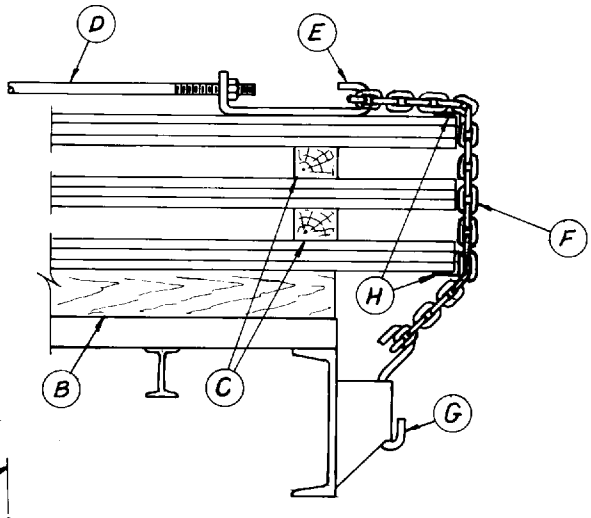

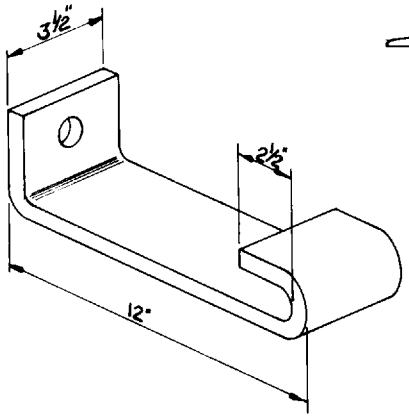

DETAIL A

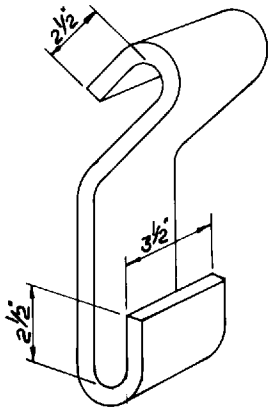

DETAIL B

Item	No. of Pcs.	Description
A		Vacant.
B	8	Bearing pieces: hardwood, 4 in. × 4 in., length equal to width of car, in one piece. Locate end pieces approximately 4 ft in from ends of pile, with others equally spaced between. Height of bearing pieces located under overhanging portion of second lift must be increased to keep load level.
C	2 rows per each void.	Separators: hardwood, 2 in. × 3 in. Locate longitudinally over side sills between overhanging lifts. Maximum void between separators and bulkhead, separators, and end of lift, must not exceed 3 ft.
D	5	Rods: 3/4-in.-diameter, threaded, with nuts. Locate across top of load and secure through hole in Items E. Use of “all thread" rod is permissible as per Section 1, General Rule 16.