Fig. 9-D (Rev. 06/13)
(New 09/83)

RAILS, 80 FT LONG OR LESS, FLATCARS, 85 FT AND OVER

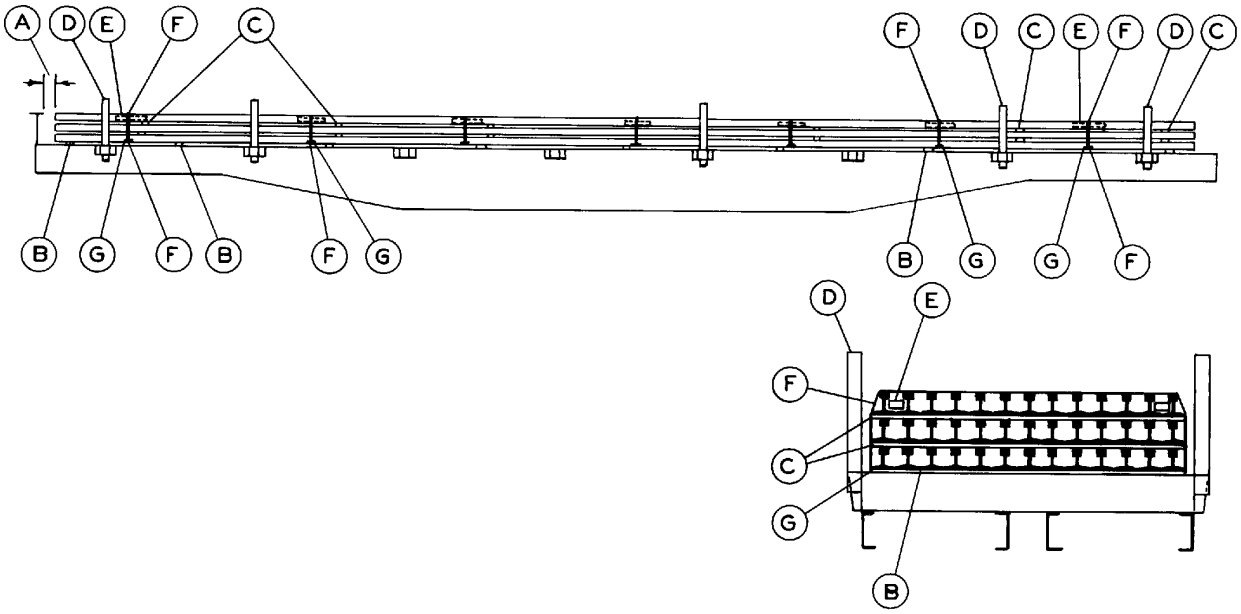

Item	No. of Pcs.	Description
A		Brake wheel clearance: see General Rule 2 in Section 1.
B	8	Bearing pieces: 1 in. × 4 in. × 9 ft lumber. Locate one approximately 5 ft from each end of load and others equally spaced in between. Securement of bearing pieces optional.
C	6 each tier.	Separators: 1 in. × 4 in. × 9 ft lumber. Locate one approximately 5 ft from each end of load and others equally spaced in between.
D	10	Stakes: 4 in. × 5 in. extending a minimum of 6 in. above top of load. Place stakes in two pockets closest to ends of load and other at center, each side.
E	14	Filler blocks: hardwood, 3 1/2 in. × 5 1/4 in. × minimum 8 in. long. Locate on top tier only, between the outside rail and the adjacent rail at banding points on both sides of load.
F	7	Encircling bands: 2 in. × .044 in. high tension. Locate approximately 5 ft from each end of rails and others spaced equally in between.
G	14	Band protectors: steel corner protectors. Locate at base of the rail on the bottom tier with the 2-in. banding threaded through the eyelet of the corner protector.
Alternate Item B		
Alt B	4	Bearing pieces: hardwood, 10 in. × 10 in. × 9 ft or 10 in. × 12 in. × 9 ft. Locate end pieces approximately 10 ft in from each end of load with others equally spaced between.

Notes and Additional Requirements:

1. Uniform tension must be applied to each banding application to ensure that the load is secured at all points.
2. At point of origin, load is to be centrally located on car.
3. If the total void space between packages exceeds 8 in., blocking must be applied to separators and bearing pieces to fill void. Secure blocking to prevent displacement.

Reference the General Rules in Section No. 1 of the *Open Top Loading Rules Manual* for additional details.

Fig. 9-E (Rev. 02/14)
(New 09/91)

RAILS, 78 FT TO 80 FT LONG—BULKHEAD FLATCARS, 85 FT AND OVER, WITH FIXED STEEL SIDE STAKES

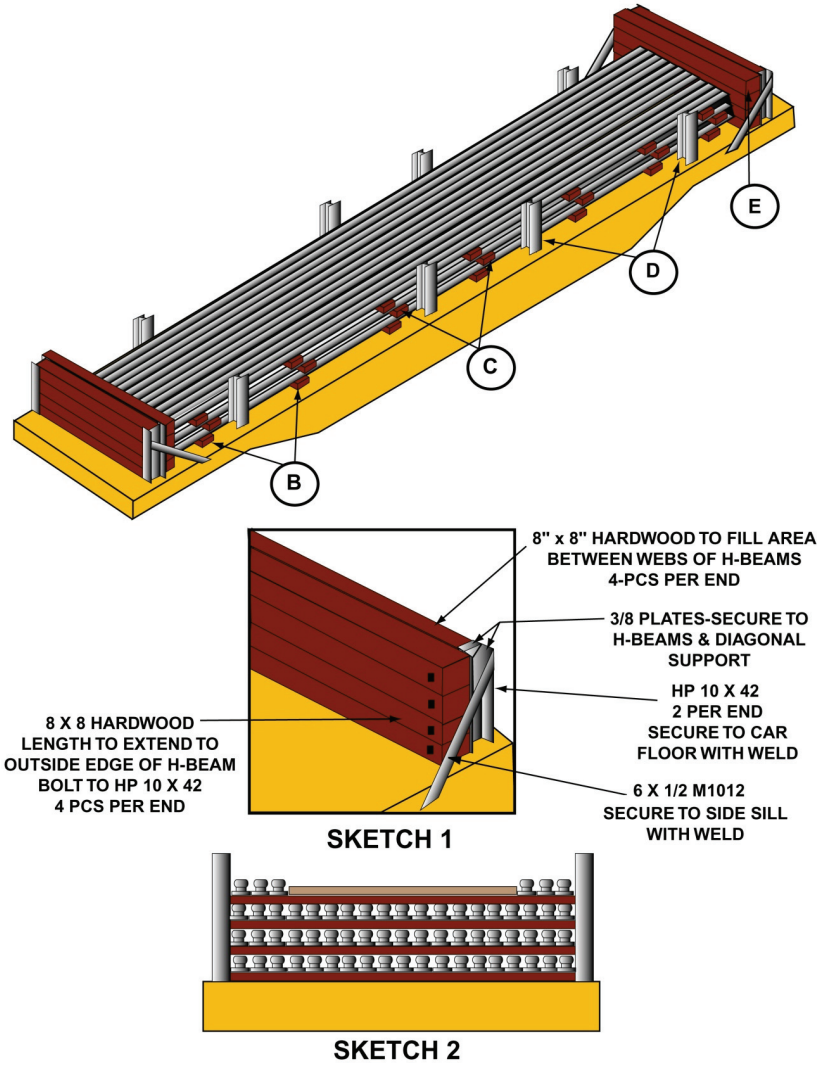

Item	No. of Pcs.	Description
A		Vacant.
B	7	Bearing pieces: hardwood, 1 in. × 3 in., length equal to width of car floor. Locate end pieces a minimum of 2 ft in from each end of load, with others equally spaced between.
C	7 each tier.	Separators: 1 in. × 3 in., hardwood, length equal to width of the load but must not extend beyond car side. Locate in line with Items B.
D	8	Steel side stakes: 10- in. H beams, height, 36 in. above car floor. Locate end stakes approximately 12 ft from ends of car. Locate intermediate stakes approximately 3 ft 6 in. from center of car.
E	1 per each end of car.	Bulkheads: construct as described in Sketch 1.

Alternate Items B and C

Alt B Alt C	7 each.	Hardwood bearing pieces and separators may be substituted by West coast type 4 × 4 Douglas Fir.

IMPLEMENTED 02/2014

Fig. 9-E (Rev. 02/14) (Concluded)
(New 09/91)

RAILS, 78 FT TO 80 FT LONG—BULKHEAD FLATCARS, 85 FT AND OVER, WITH FIXED STEEL SIDE STAKES

Notes and Additional Requirements:

1. Maximum total amount of longitudinal void must not exceed 4 ft 8 in.
2. Shorter pieces minimum 60 ft long may be loaded in the middle of the load but cannot be in the bottom row or as an outside piece that can contact Item D, the side stakes. The number of short pieces cannot exceed 15% of the total number of pieces in the load.
3. Maximum lateral void must not exceed the base width of one rail in any layer.
4. Top layer may be reduced providing void is filled as shown in Sketch 2. One spreader block is required for each separator to maintain the requirement of Note 3. Spreader block should be equal to width of separator and no less than 2 in. in height and secured as per Section 1, Rule 11.9. To maintain a balanced load, rail on either side of block must be equal ± one piece.
5. Height of load must not exceed height of bulkheads or side stakes.
6. Do not weld, cut/burn holes, or modify car body without car owner's permission.

Reference the General Rules in Section No. 1 of the *Open Top Loading Rules Manual* for additional details.

IMPLEMENTED 02/2014

Fig. 9-F (Rev. 06/13)
(New 11/96)

RAILS, 80 FT LONG OR LESS—FLATCARS, 89 FT, WITH POLYESTER WEBBING TIE-DOWNS

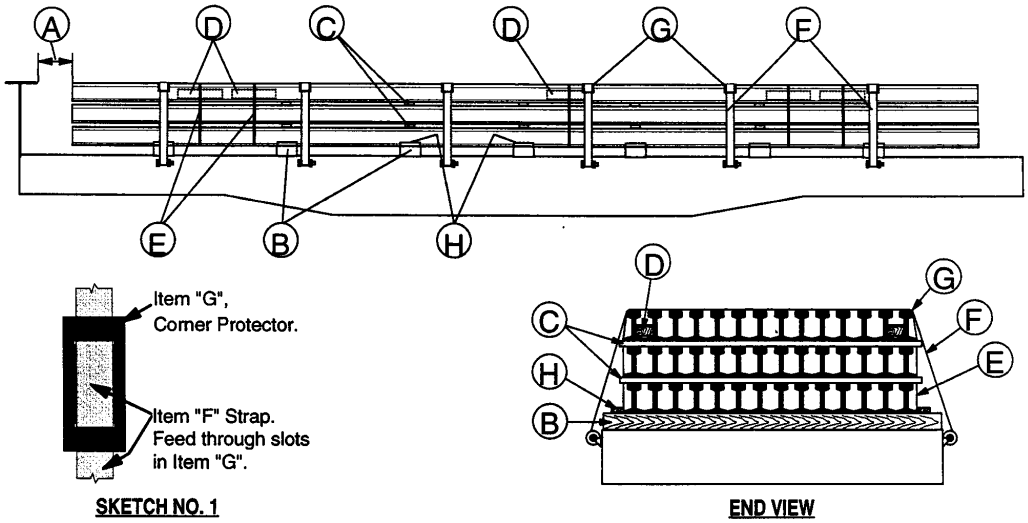

Item	No. of Pcs.	Description
A		Brake wheel clearance: see General Rule 2 in Section 1.
B	7 per pile.	Bearing pieces: hardwood, minimum 4 in. × 6 in., length about equal to width of car and sufficient to apply Item H chock blocks. Locate one approximately 5 ft from each end of load and others equally spaced between. Secure each to the car floor using two 3/4-in. bolts, one at each end.
C	7 per layer.	Separators: lumber, minimum 1 in. × 3 in., length to extend a minimum of 2 in. beyond the width of the load but must not be so long as to foul Item E straps should the load shift in transit. Locate in line with Items B.
D	10	Filler blocks: hardwood, 3 1/2 in. × 5 1/4 in. × 24 in. Locate only in top layer between each outer side section of rail and the adjacent rail at points where Item E bands are located.
E	5 per pile.	Encircling bands: 2 in. × .044 in. high tension bands. Locate two on each end of load, midway between the first and second bearing pieces. The fifth band is to be placed near center of load and as far from bearing pieces as possible. Steel corner protectors must be used between each band and where they contact the base of the rail on the bottom layer. Corner protectors must have a means to prevent their displacement.
F	6 per pile.	Tie-down straps: assemblies with an MBS of 21,340 lb, consisting of 4-in.-wide polyester webbing straps and ratchet winches on each side of car. End straps to be located near end bearing pieces with others spaced evenly over length of load and as far from Item E bands as possible to prevent damage. Straps are to be placed over entire load and secured to each side of car. Winch tight from each side of car using a 36-in.-long steel bar.
G	12	Strap corner protectors: cord reinforced rubber belting (or material with equivalent strength and coefficient of friction), approximately 3/8 in. × 7 in. wide × 9 in. long. One protector must be used between Item F strap and where they contact the top edge of rail. Corner protectors must be designed to prevent their displacement from under straps in the event of end shift. See Sketch 1.
H	2 each Item B.	Chocks: lumber, 1 in. × 3 in. × 6 in. Locate against rail in bottom layer on each side of load. Position lengthwise with car and secure each to Item B bearing pieces using two common nails, length a minimum of 2 in. longer than thickness of chock.

Notes and Additional Requirements:

1. Load must be centrally located on car at point of origin.
2. Uniform tension must be applied to each band and tie-down assembly to ensure that the load is secured at all points.
3. Five pair of side stakes per pile, 4 in. × 5 in., hardwood or equivalent in steel, extending a minimum of 6 in. above top of load, may be used in place of Item H chocks provided there is no more than 2 in. of total lateral void between load and side stakes.
4. Do not weld, cut/burn holes, or modify car body without car owner's permission.

Reference the General Rules in Section No. 1 of the *Open Top Loading Rules Manual* for additional details.