Fig. 128-A (Rev. 06/14)
(New 07/09)

PIPE, STEEL, BARE, COATED, 6 5/8 IN. TO 14 IN. O.D., 43 FT LONG AND OVER—BULKHEAD FLATCARS, WITH CUSHIONING DEVICES

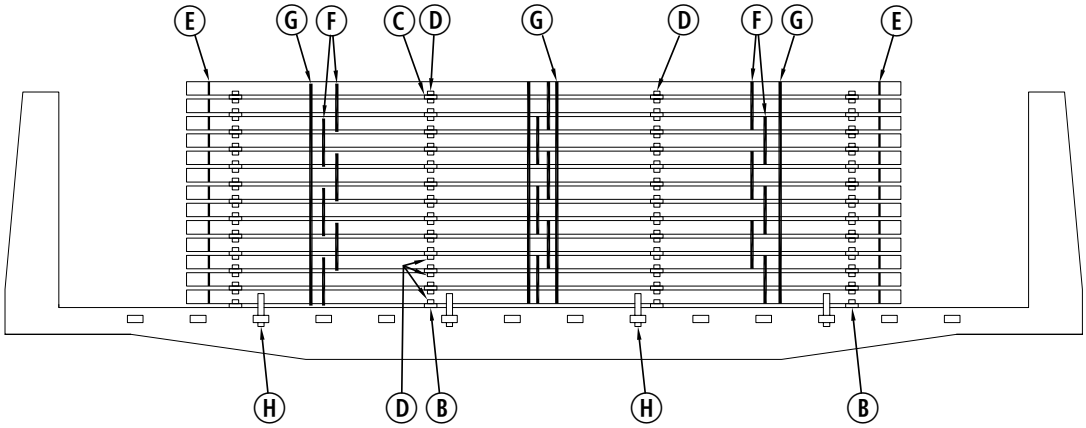

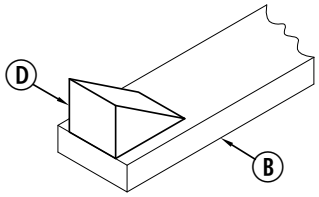

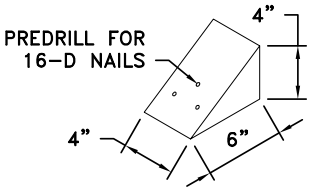

ITEM "D"

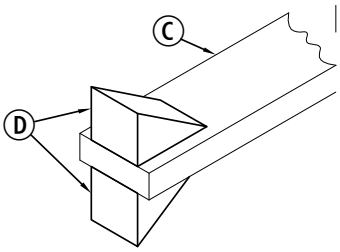

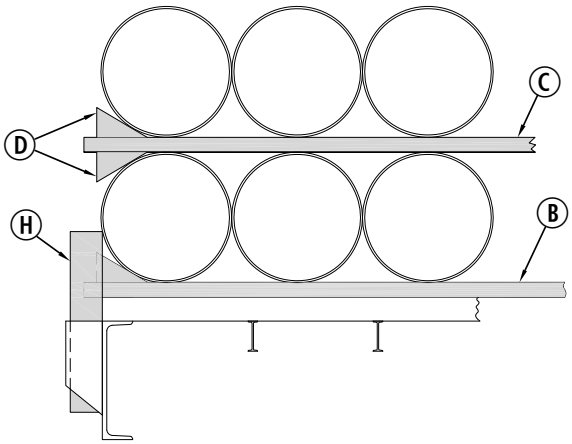

SKETCH 1

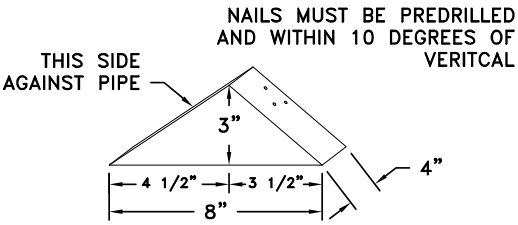

ALTERNATE ITEM "D"

IMPLEMENTED 06/2014

Fig. 128-A (Rev. 06/14) (Concluded)
(New 07/09)

PIPE, STEEL, BARE, COATED, 6 5/8 IN. TO 14 IN. O.D., 43 FT LONG AND OVER—BULKHEAD FLATCARS, WITH CUSHIONING DEVICES

Item	No. of Pcs.	Description
A		Vacant.
B	4 per pile 43 ft long. Add one for each additional 10 ft or less.	Bearing pieces: hardwood, 2 in. × 6 in., in one piece and preferably rough. Length equal to width of car, but must not extend beyond outside face of stake pockets. Locate end pieces approximately 5 ft in from each end of load. Two intermediate bearing pieces to be located about 8 ft from each end piece. Secure each to car floor with six 20-D nails.
C	4 per pile 43 ft. long. Add one for each additional 10 ft or less.	Separators: hardwood, 2 in. × 6 in., length equal to width of load but not to extend beyond width of car. Locate between each layer except the top layer when nested. Position in line with Items B where possible. For pipe 8 in. in diameter or less, all separators must be staggered with a vertical offset sufficient to avoid chock contact (this not shown on drawing).
D	2 per each Item B. 4 per each Item C.	Chock blocks: hardwood, 4 in. × 4 in. × 6 in., predrilled. Locate at each end of Items B against pipe and secure each with three 20-D common nails. On Item C, locate one top and bottom on each side of load against pipe and secure each with three 20-D common nails. For pipe 8 in. in diameter or less, chocks on the Item B bearing pieces and the bottom of the Item C separators between the first and second layer must be of hardwood, 2 in. × 6 in. × 6 in., predrilled and secured with three 16-D common nails.
E	2 per each layer	Layer encircling bands: 2 in. × .044 in. high tension. Locate one at each end of each layer encircling the layer. Apply as each layer is placed on car. Locate as far from bearing pieces, separators, and other bands as possible.
F	3 per each layer 43 ft long. Add one for each additional 10 ft or less.	Interlacing bands: 2 in. × .044 in., high tension. Locate under bottom of layer encircling pipe in the two layers above. Bands are to encircle three layers together, interlocking layers 1, 2, and 3; layers 3, 4, and 5; etc.; to top of load. When the top layer is nested on the layer below, it is to be encircled by the top set of bands, even if this represents the fourth layer. Bands are to be located at least 1 in. apart and grouped as far from Items B and C as practicable.
G	4 per pile 43 ft long. Add one for each additional 10 ft or less.	Encircling bands: 2 in. × .044 in., high tension. Place under bottom layer, encircling entire load evenly spaced, as far as possible from bearing pieces, separators, and other bands. Locate end bands approximately 3 ft from each end of the load with the others equally spaced between.
H	4 per side.	Stub stakes: hardwood, 4 in. × 5 in., height equal to center of pipe on bottom layer, but not to interface with chock blocks located on bottom of separators. Locate one at each corner of load, outside or inside of end bearing pieces as illustrated in Sketch 1, and secure to stake pockets to prevent displacement. Load must be protected by a minimum of two pairs of stakes at all times

Alternate Item D

Alt D	2 per each Item B. 4 per each Item C.	Chock block: hardwood, 3 in. × 4 in. × 8 in., predrilled, unless power-driven nails are used. Attach one at each end of Items B against pipe and secure each with three 16-D nails. Attach one top and bottom of each Item C on each side of load against pipe. Secure each with three 16-D nails.

Notes and Additional Requirements:

1. Load must be centrally located on car at origin.
2. Items B and C may be of West Coast Douglas Fir for loads weighing 140,000 lb or less. If load exceeds 140,000 lb, hardwood must be used.

Reference General Rules 1, 3, 10, 11, 13, 15, 17, and 25 in Section No. 1 of the *Open Top Loading Rules Manual* for additional details.

IMPLEMENTED 06/2014